CNTD

TEMPERATURE CONTROL METER SERIES

INSTRUCTION MANUAL

▣ Product safety Cautions

"Product safety Cautions" is for using the product safely and correctly. In case any dangerous accidents happen, please follow the following instructions.
"Product safety Cautions" can be divided into two parts, "warning" and "attention". They are explained as followed.
For warning, if you violate regarding instructions, it may cause severely injury or death.
For attention, if you violate regarding instructions, it may cause slightly injury or product damage.
⚠It means under any exceptional circumstances, it may cause accidents or danger.

⚠ Warning

1. When it is being used on machines that has significant impact on personal safety and their property(like Nuclear energy control,armamentarium, boats and ships, vehicles, railway, aviation, burning equipment, safety devices, anti-theft device, Disaster prevention device etc.), it needs to install double safety protection device.Otherwise, it may cause fire, personal injury or property loss.
2. You must install panel before you use it, or you will get electric shock.
3. Do not repair it if the power is on, or you will get electric shock.
4. Please confirm the terminal number before wiring. Otherwise it may cause a fire.
5. Do not reform the product other than maintenance staff in our company, or it may cause electric shock or fire.

⚠ Attention

1. Do not use this product outside. Otherwise, it will reduce the useful lifespan or cause electric shock.
2. When wiring the power input terminal and relay output terminal, please use cable of AWG20 (0.50mm^2), with tightening torque of 0.74-0.90Nm for the screws.There is a risk of fire in case of poor contact.
3. Please use the product within rated specifications. Otherwise, it will reduce the useful lifespan or cause fire.
4. The load should be smaller than the allowable capacity of relay contacts.Otherwise it will result in poor insulation, contacts bonding, poor contact, relay damage, fire, etc.
5. Do not use water or organic solvent to clean the product. Please use dry towel. Otherwise it may cause electric shock or fire.
6. Avoid using this product in places that are explosive, damp, sunlight exposed, thermal-radiating, vibrational etc. Otherwise, it will cause fire or explosion.
7. Make sure no dust or cable residue inside the product, or it will cause fire or product failure.
8. Confirm polarity of terminals first , then correctly connect the wire of thermocoup. Otherwise, it will cause fire or explosion.
9. In order to achieve the purpose of strengthening insulation, please use fundamental insulation or above power supply devices.

Electrical Specification

Rated voltage	100-240V AC，50HZ
Power consumption	≤ 5VA
Operating ambient	Ambient temperature：0℃ -50℃ Relative humidity: 35%-85% RH (No-condensing)
Storage Temperature	-25℃ -65℃ (Avoid freezing)
Esolution power	1℃，0.1℃ (Adjustable)
Wiring method	Connecting terminal
Measuring accuracy	±0. 5%FS
Memory Protection	Non-volatile memory
Installation conditions	Installation type II, Pollution degree 2
Relay output	Relay contact：AC220V/DC30V,3A
Logic level output	ON：DC12V; OFF：Below DC0.5V； Maximum Flow：30mA，Oad resistance ≥ 1K

Product Selection

C	TN	4	S		4	1	1	
①	②	③	④		⑤	⑥	⑦	⑧

① Name of the company	C	CNTD		
② Series	TN	Standard digital dual display PID temperature controller		
	TZ	High precision digital dual display PID temperature controller		
③ Digit	4	9999（4 digit）		
④ Dimen-sions	S	4848		
	V	4896		
	H	9648		
	M	7272		
	L	9696		
⑤ Voltage supply	2	24VAC 50/60Hz，24-48VDC		
	4	Switch power supply (85~265VAC 50/60Hz)		
⑥ Control output	1	Relay	4	SCR zero-crossing output
	2	SSR output	5	SCR built-in (5A)
	3	Analog output	6	SSR + relay output
⑦ Alarm output	1	1-way relay	3	1-way SSR
	2	2-way relay	4	2-way SSR
⑧ Graduation	Non	Thermocouple multiple input (default setting K),E,J,N,W3-25,W5-26		
	P	Thermal resistance input PT100		
	C	Thermal resistance input Cu50		

Outline and hole dimension table

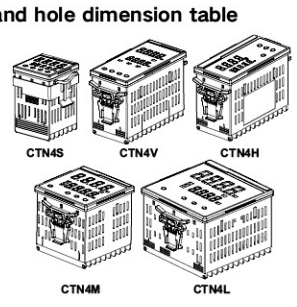

Unit: mm

Type	Panel size	Shell Dimension (L × W × H)	Hole size
CTN4S	48×48	48×48×81	46×46
CTN4V	48×96	48×96×71	46×93
CTN4H	96×48	96×48×71	93×46
CTN4M	72×72	72×72×81	69×69
CTN4L	96×96	96×96×71	93×93

Enter Graduation type selection

	Signal input	Graduation	Setup code	Setup range
Temperature input (P16)	(Default) K	K	0	-200℃ -1200℃
		E	1	-200℃ -650℃
		J	2	-200℃ -850℃
		N	5	-200℃ -1300℃
		W3-25	10	0℃ -2300℃
		W5-26	11	0℃ -2300℃
	P	PT100	8	-200℃ -850℃
	C	Cu50	9	-50℃ -150℃

Terminal connection

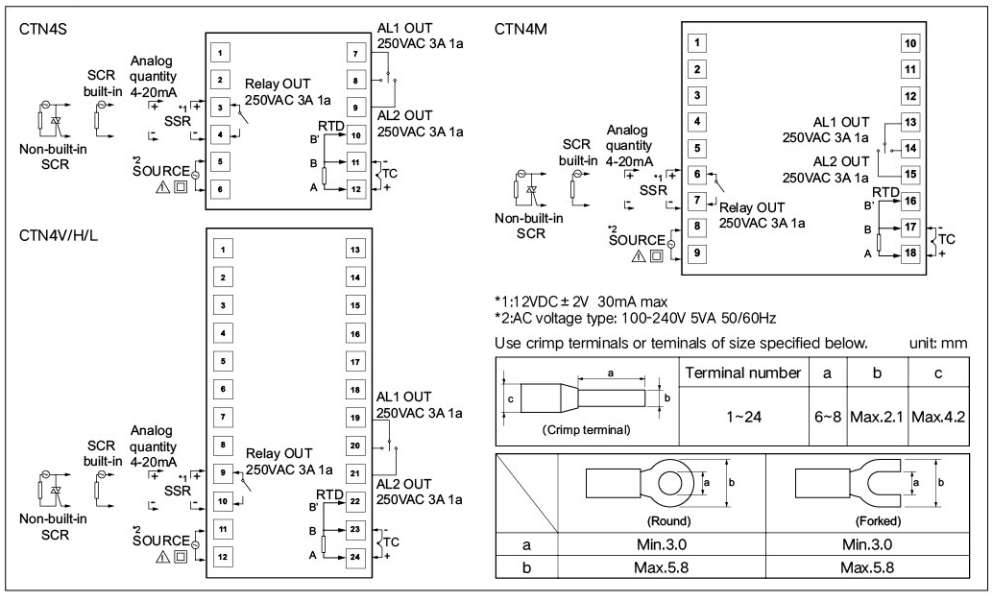

*1:12VDC±2V 30mA max
*2:AC voltage type: 100-240V 5VA 50/60Hz

Use crimp terminals or teminals of size specified below. unit: mm

Terminal number	a	b	c
1~24	6~8	Max.2.1	Max.4.2

	(Round)	(Forked)
a	Min.3.0	Min.3.0
b	Max.5.8	Max.5.8

Operation panel function description

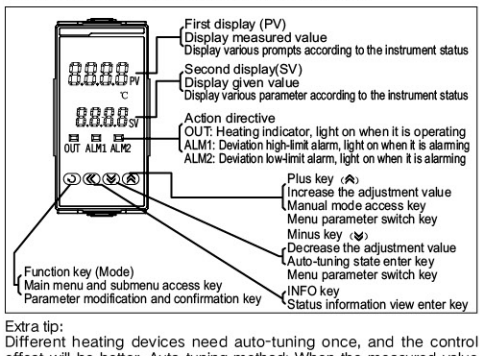

Extra tip:
Different heating devices need auto-tuning once, and the control effect will be better. Auto-tuning method: When the measured value is far below the target value under normal temperature control, press and hold the (AT) key for 5 seconds until the PV measured temperature value flickers, it means entering the auto-tuning state. The auto-tuning state can be cancelled and exited by pressing and holding the (AT) key for 3 seconds. The self-tuning process is a stepping control. Different heating models (devices) have different self-tuning times, and the temperature may fluctuate greatly. The measured value in the PV window stops flickering when the auto-tuning is completed, the tuning value is automatically saved, and the meter returns to the normal temperature control state. The new P, I, D values are used to calculate the temperature control.
Note: Please refer to the instrument operation guide.

Menu display description

Code	Menu function	Default	Setting range	Limits of authority	Description
P00	Paranmeter lock	0	0~900	0	0 is level 0 limits of authority； 1 is level 1 limites of authority； 18 is level 2 limites of authority; 110 is to reset to Factory Defaults;
P12	Display Accuracy	0	0~1	1	P12=0 means there is no decimal point; P12=1 means there is decimal point;
P13	Temperature compensation	0	P32~P33 value	1	Used for temperature correction when sensor position problems or other factors affecting temperature occur
P16	put in index type	Valid type	0~11	1	For details, please see <Enter Index Type Selection>
P17	Alarm 1 Mode	1	0~24	1	First alarm mode, setting details please see <ALM Definition of Alarm parameter>
P18	Alarm 1 upper limit	10	P32~P33 value	1	
P19	Alarm 1 lower limit	0	P32~P33 value	0	
P20	Alarm 1 parameter	0	0~7	1	
P22	Alarm 2 Mode	0	0~24	2	Second alarm mode is as same as first alarm mode, setting details please see <ALM Definition of Alarm parameter>
P23	Alarm 2 upper limit	0	P32~P33 value	2	
P24	Alarm 2 lower limit	0	P32~P33 value	0	
P25	Alarm 2 parameter	0	0~7	2	
P28	Manual input	0	-100~100	0	Manual input
P31	Huacentigrade switching	0	0~1	2	P31=0 is centigrade P31=1 is Fahrenheit
P32	Set upper temperature limit	Applicable temperature range of sensor		1	Maximum allowable set for temperature
P33	Set lower temperature limit	Applicable temperature range of sensor		2	Minimum allowable set for temperature
P46	SV Operation mode selection	0	0~1	2	Details please see <SV Operation Mode Selection>
P67	PID control mode	0	0~2	1	Details please see <PID Control Mode Selection>
P70	Heating backlash	0.5	0~999.9	1	When P67 = 2-step control, modify the heating differential value for heating differential control
P72	Auto-tuning AT	0	0~2	0	Automatic calculation function for automatically adapting PID parameters to user system
P73	Overshoot suppression coefficient	3	0~20	1	Overshoot suppression coefficient
P74	Limiting strength coefficient	1	0~3	2	Limiting strength coefficient
P76	Heating parameter P	12	0.1~ maximum (℃)	1	Adjustment of proportional action, the larger the P value, the smaller the proportional action, and the lower the system gain
P77	Heating parameter I	135	1~ maximum (s)	1	Integral-action time constant. The larger the I value, the weaker the integral action. I = 0 PD control
P78	Heating parameter D	27	1~ maximum (s)	1	Derivate-action time constant. The larger the D value, the stronger the derivative action. D = 0 PI control
P79	Advance control quality	5.0	0.1~10.0	1	Enter control state in advance unit: degree
P80	Heating period HT	20	1~100	1	Relay:20. logic level:3
P82	Refrigeration period HT	20	1~100	1	Relay:20. logic level:3
P83	Refrigeration parameter P	10	0.1~ maximum (℃)	1	Adjustment of proportional action, the larger the P value, the smaller the proportional action, and the lower the system gain
P84	Refrigeration parameter I	240	1~ maximum (s)	1	Integral-action time constant. The larger the I value, the weaker the integral action. I = 0 PD control
P85	Refrigeration parameter D	40	1~ maximum (s)	1	Derivate-action time constant. The larger the D value, the stronger the derivative action. D = 0 PI control
P89	Output maximum limit	100	0~100	0	Output maximum limit
P90	Output minimum limit	-100	-100~0	2	Output minimum limit
P91	Limit Output variation	0	0~100	2	Limit Output variation

ALM Definition of alarm mode

ALM Definition of alarm mode - P17/P22		
P17/P22 Code	Name of Alarm	illustration
0	No alarm	No alarm output
1	Upper limit of deviation	When PV > SV+P18, alarm
2	Lower limit of deviation	When PV < SV-P19, alarm
3	Upper and lower limit of deviation	When PV > SV+P18 or PV < SV-P19, alarm
4	Scope of upper and lower limit of deviation	When PV < SV+P18 and PV > SV-P19, alarm
5	upper limit of deviation (hold)	When PV>SV+P18, alarm
6	Lower limit of deviation (hold)	When PV<SV-P19, alarm
7	Upper and lower limit of deviation (hold)	When PV>SV+P18 or PV<SV-P19, alarm
8	scope of upper and lower limit of deviation (hold)	When PV<SV+P18 and PV > SV-P19, alarm
9	Upper limit of absolute value	When PV>P18, alarm
10	Lower limit of absolute value	When PV<P19, alarm
11	Upper and lower limit of absolute value	When PV>P18 or PV<P19, alarm
12	Scope of upper and lower limit of absolute value	When PV< P18 and PV>P19, alarm
13	Upper limit of absolute value (hold)	When PV > P18, alarm
14	lower limit of absolute value (hold)	When PV<P19, alarm
15	Upper and lower limit of absolute value (hold)	When PV>P18 or PV<P19, alarm
16	Scope of upper and lower limit of absolute value (hold)	When PV< P18 and PV>P19, alarm
17	Upper limit of backlash	When PV > SV+P18, alarm. No alarm until PV<SV-P19
18	Lower limit of backlash	When PV < SV-P19, alarm. No alarm until PV>SV+P18
19	Backlash of upper limit of absolute value	When PV > P18, alarm. No alarm until PV<P19
20	Backlash of lower limit of absolute value	When PV<P19, alarm. No alarm until PV>P18
21	Upper limit of backlash (hold)	When PV > SV+P18, alarm. No alarm until PV<SV-P19
22	Lower limit of backlash (hold)	When PV < SV-P19, alarm. No alarm until PV>SV+P18
23	Backlash of upper limit of absolute value (hold)	When PV > P18, alarm. No alarm until PV<P19
24	Backlash of lower limit of absolute value (hold)	When PV<P19, alarm. No alarm until PV>P18
Note: "Hold" means the alarm will be removed when turning on the power: If the temperature control meter is in alarm state when starting up, it will not give an alarm. The temperature control meter should be in normal state first, and the alarm will not be issued until the alarm condition is reached again.		

ALM Definition of alarm parameter

ALM Definition of alarm parameter - P20/P25		
P20/P25 Code	no	Description
0	Alarm output 1 (ALM1)	If this code is selected, the corresponding alarm point action will be equivalent to ALM1 action
1	Alarm output 2 (ALM2)	If this code is selected, the corresponding alarm point action will be equivalent to ALM2 action
2	Heating output	Switch heating output point, details see <Guidence of Instrument Operation>
3	Refrigeration output	Two way PID configuration refrigeration output point
4	Manual sign	Corresponding action flag when manual output function is enabled
5	Information sign	When INFO menu: Configurable action output point when the value in code f.01 is not 0, details see Description of Status Information
6	Error sign	Configurable action output point when error failure occurs, details see <Description of Error Display>
7	Upper and lower limit of deviation (hold)	When PV>SV+P18 or PV<SV-P19, alarm
Attention:When this parameter is configured, the corresponding P17 or P22 should be configured as 0 before operation		

SV Operation mode selection

Code	Parameter	Description	Limits of authority
P46	0	When setting the temperature, click MODE key first, then press plus / minus key to adjust, and then press MODE key to confirm	2 level
	1	When setting the temperature, directly press the plus/minus keys to adjust, and automatically confirm after stopping the adjustment	

PID Control Mode Selection

P67 Set value	0	1	2
Mode	Unidirectional PID	Bidirectional PID	ON/OFF

Description of status information

INFO Description of status information			
Parameter Code	Code meaning	Parameter Code	Code meaning
F.01	Code of message alarm	F.91	Production time: month
F.10	Control output	F.92	Production time: day
F.11	Cold end temperature (room temperature)	F.93	Software version number
F.12	Internal parameters	F.94	PID library version number
F.90	Production time: Year	F.95	User version number

Description of error display

Description of error display			
Error display	Code meaning	Debug	Remarks
Er0	No error status	No	Upper row of digital tube (PV) flashing display
Er1	Invalid debug parameter	Instrument failure, please contact the manufacturer	
Er2	Thermal resistance disconnection	Check whether the thermal resistance connecting wire is disconnected	
Er3	Temperature of cold end is abnormal	Instrument failure, please contact the manufacturer	
Er4	Over upper limit range	Check whether the thermocouple connecting wire is disconnected	
Er5	Out of lower limit range	Check whether the thermocouple connecting wire is disconnected	

Other information

Difference between Unidirectional PID and Bidirectional PID:
a. Reduce energy consumption and achieve accurate temperature control.
b. Cooling and heating with intelligent PID control.
c. Break through the limitation of temperature fluctuation caused by traditional step refrigeration.
e. Refrigeration is changed from fixed-point differential control to intelligent PID control, and the degree of progress is equivalent to the upgrade of pointer gauge to intelligent meter.

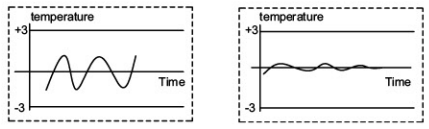

Instrument operation indication

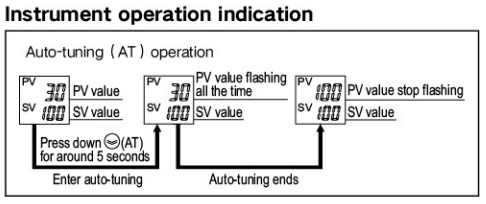

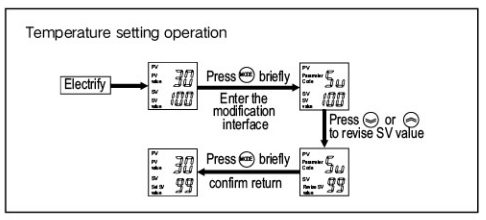

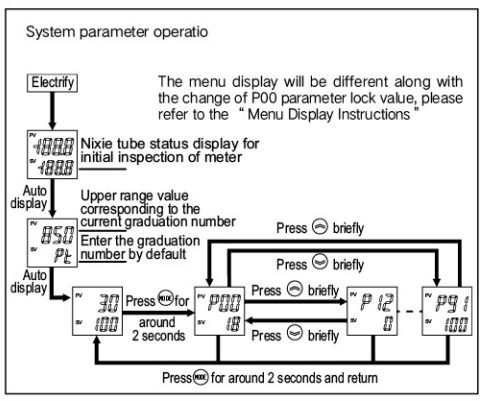

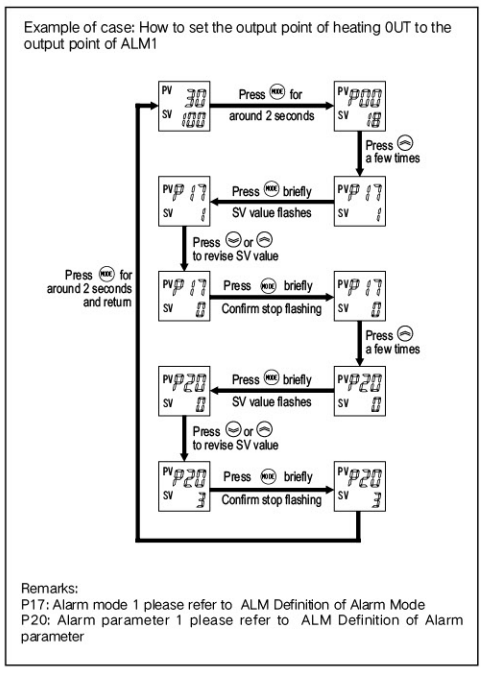

Remarks:
P17: Alarm mode 1 please refer to ALM Definition of Alarm Mode
P20: Alarm parameter 1 please refer to ALM Definition of Alarm parameter

www.cntd.com

CNTD ELECTRIC TECHNOLOGY CO.,LTD.

Address: No.258,Road 11, Yueqing economic development zone, Zhejiang Province, China
Service Hotline:400-860-7277